REV.	DESCRIPTION	DATE	DESIGNED
-2	Drawing renewal	Dec.26.2000	K. Yuasa

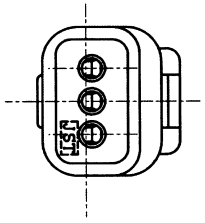

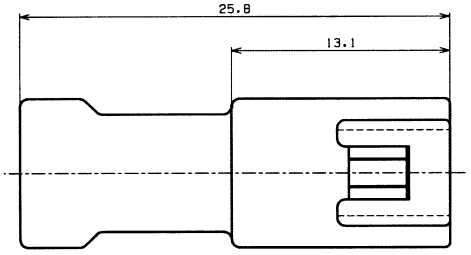

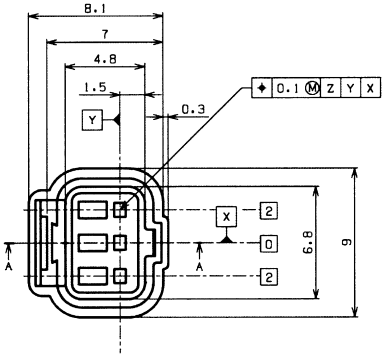

NOTE
1.Unless otherwise specified tolerances are
5≦L>0:±0.2
L≧5:±0.3
2.Location of circuit number

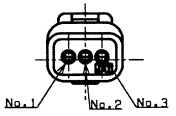

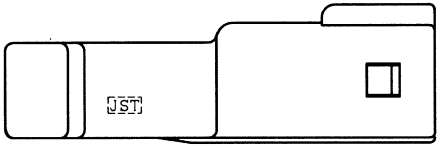

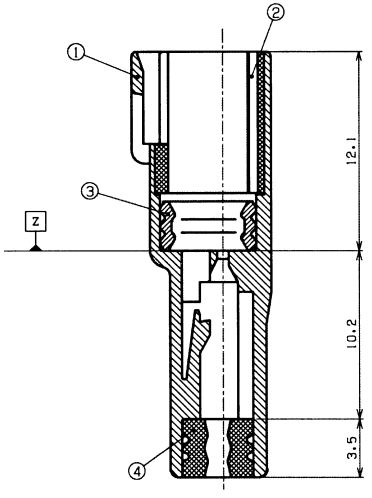

Sect.A-A

JST CORP
SEP 11 2001
WEC

No.	PART NAME	MATERIAL	SURFACE FINISH	REMARKS
4	Seal Rubber Plate	Si (Light Blue)		
3	Seal Ring	Si (Blue)		
2	Seal Ring Holder	PBT (Yellow)		UL94V-0
1	TAB Housing	PBT (Natural)		UL94V-0

SIZE	UNIT	SCALE	PROJECTION	DATE
A2	METRIC	10:1		DEC.26.2000

APPROVED	CHECKED	DESIGNED	DRAWN
A. Tomita		K. Yuasa	N. Murata

CUSTOMER

SERIES NAME	TAB HOUSING ASSEMBLY, JWPF CONNECTOR
PART No.	03T-JWPF-VSLE-S
DRAWING No.	KRD-25217-2 RO

JST J.S.T.MFG.CO, .LTD

THIS DRAWING CONTAINS INFORMATION THAT IS PROPRIETARY TO J.S.T.
AND SHOULD NOT BE USED WITHOUT WRITTEN PERMISSION.

EC4113-2