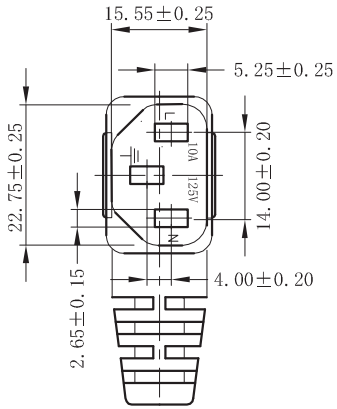

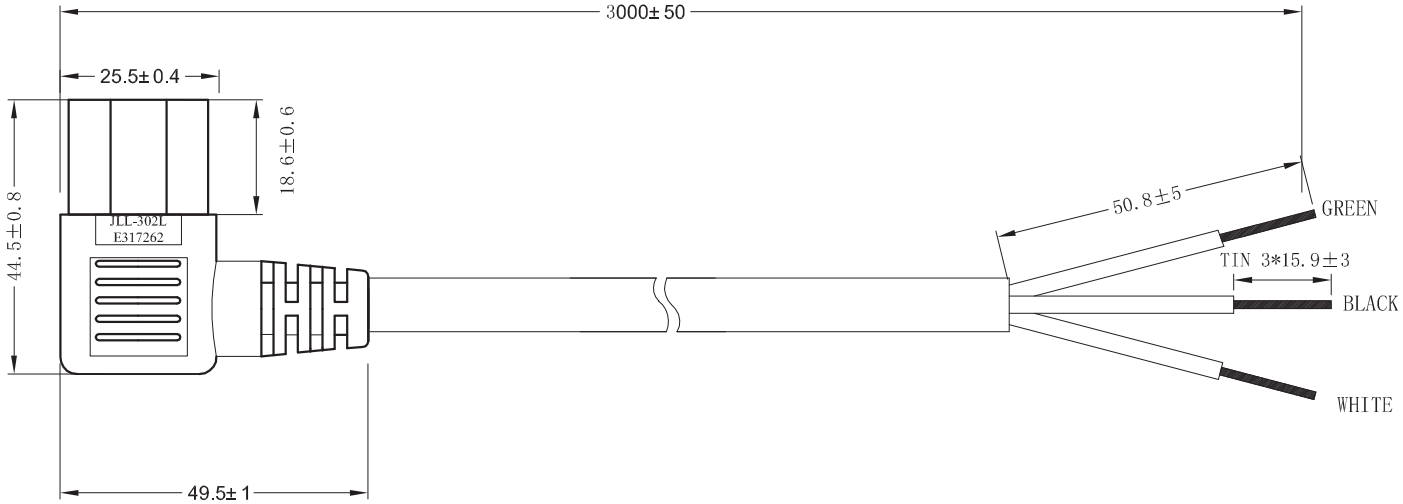

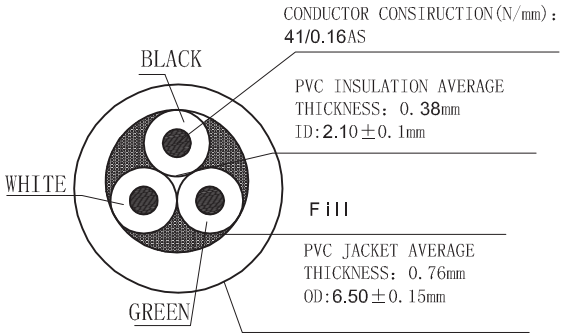

Notes:

- E243711 (UL) SVT 3x18AWG(0.824mm²) VW-1 60°C 300V
  CSA 228191 SVT 3x18AWG(0.824mm²) FT2 60°C 300V -LF-
- Jacket color: Black
- E-Green; L-Black; N-White

Electrical:

- 100% open and short testing
- Insulation Resistance: 100MΩ Min.
- Voltage: 500V DC/1min

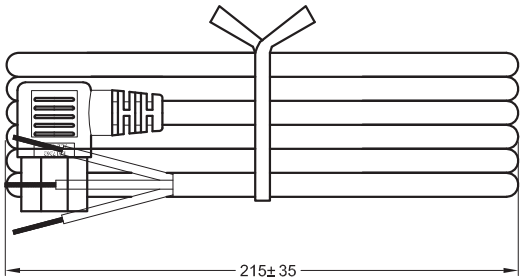

Unit: mm

RoHS Compliant

Scale	Free
TOLERANCE	
X.	±0.3
X.X	±X
X.XX	±X
DIM	TOL
X.°	±X°
X.X°	±X°
Angle	TOL

Id.	Modification	Date	Name

	Date	Name
Drawn	23.04.14	Wilson
Approved	23.04.14	Groll

ASSMANN WSW components

1840 W. Drake Drive, Suite 101 • Tempe, AZ 85283
Toll Free: 1-877-277-6266 • Email: info@assmann.us

Title
Power cord
Right angle to Open, 3 Meters, SVT

ASSMANN WSW-No.
A-PC1504-030021-1

Drawing-No.

rev00

Replace

Sheet
1/1