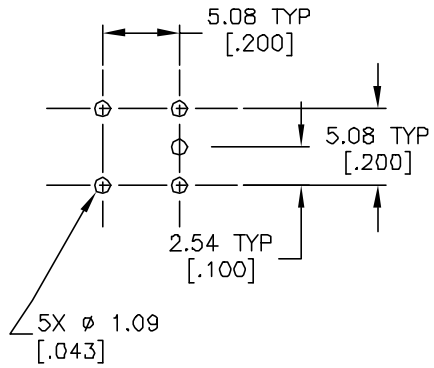

RECOMMENDED P.C.B. LAYOUT

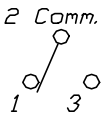

CONTACT CONFIGURATION

SPDT

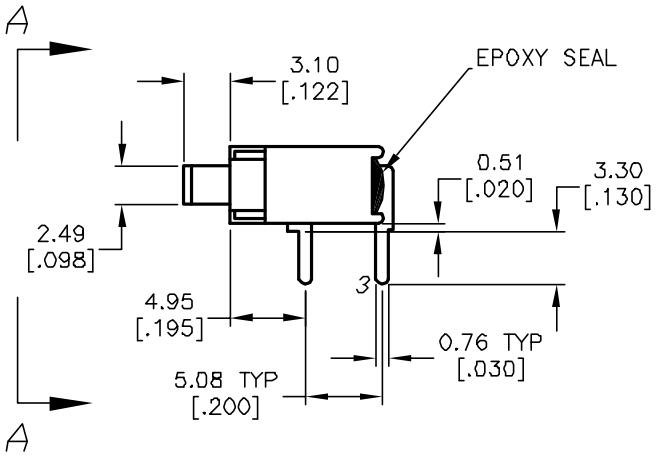

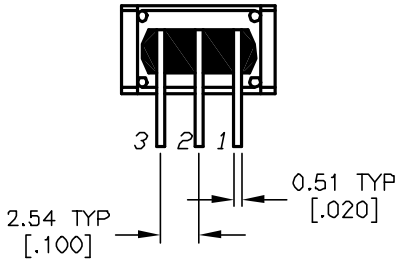

VIEW A-A

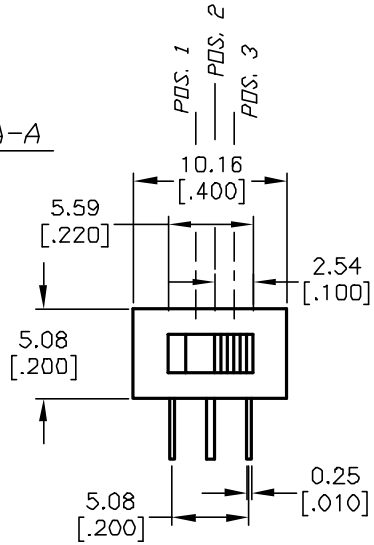

▲

SWITCH FUNCTION		
POS. 1	POS. 2	POS. 3
ON	OFF	ON
2-1	OPEN	2-3

NOTES:

1. ALL DIMENSIONS IN MM [INCH]
2. GENERAL TOLERANCE: X.X=±0.4
   X.XX=±0.25
3. TERM. NOS. FOR REF. ONLY
4. RATING: 3 AMPS RESISTIVE LOAD @ 120 VAC OR 28VDC
   1 AMPS RESISTIVE LOAD @ 250VAC
5. ▲ FIXED AND MOVING CONTACTS:
   COPPER ALLOY W/ SILVER PLATING
6. ELECTRICAL LIFE: 30,000 ACTUATIONS AT FULL LOAD
7. INSULATION RESISTANCE: 1,000MΩ MIN.
8. DIELECTRIC STRENGTH: 1,000V RMS @sea level.
9. OPERATING TEMP.: −30°C to 85°C.
10. ▲ DENOTES CRITICAL PARAMETER.

REV.	ECN No.	DESCRIPTION	DATE	CHKD
A	13165	RELEASED FOR PRODUCTION	5/28/03	AR

THE INFORMATION CONTAINED IN THIS DOCUMENT IS PROPRIETARY TO E-SWITCH AND IS NOT TO BE COPIED OR TRANSFERRED

E-SWITCH®

TITLE 500ASSP3M6QE

SCALE	DATE	DR	DWG	REV
2:1	5/28/03	AR	T551305	A