DRAWING NO
C- 210715

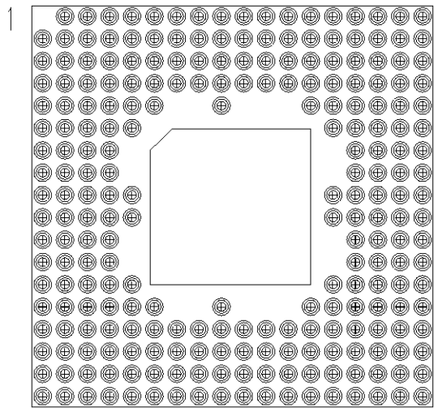

241 positions

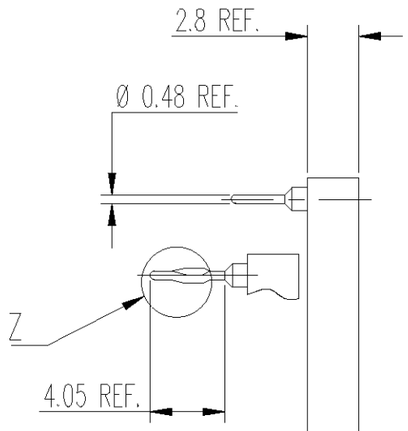

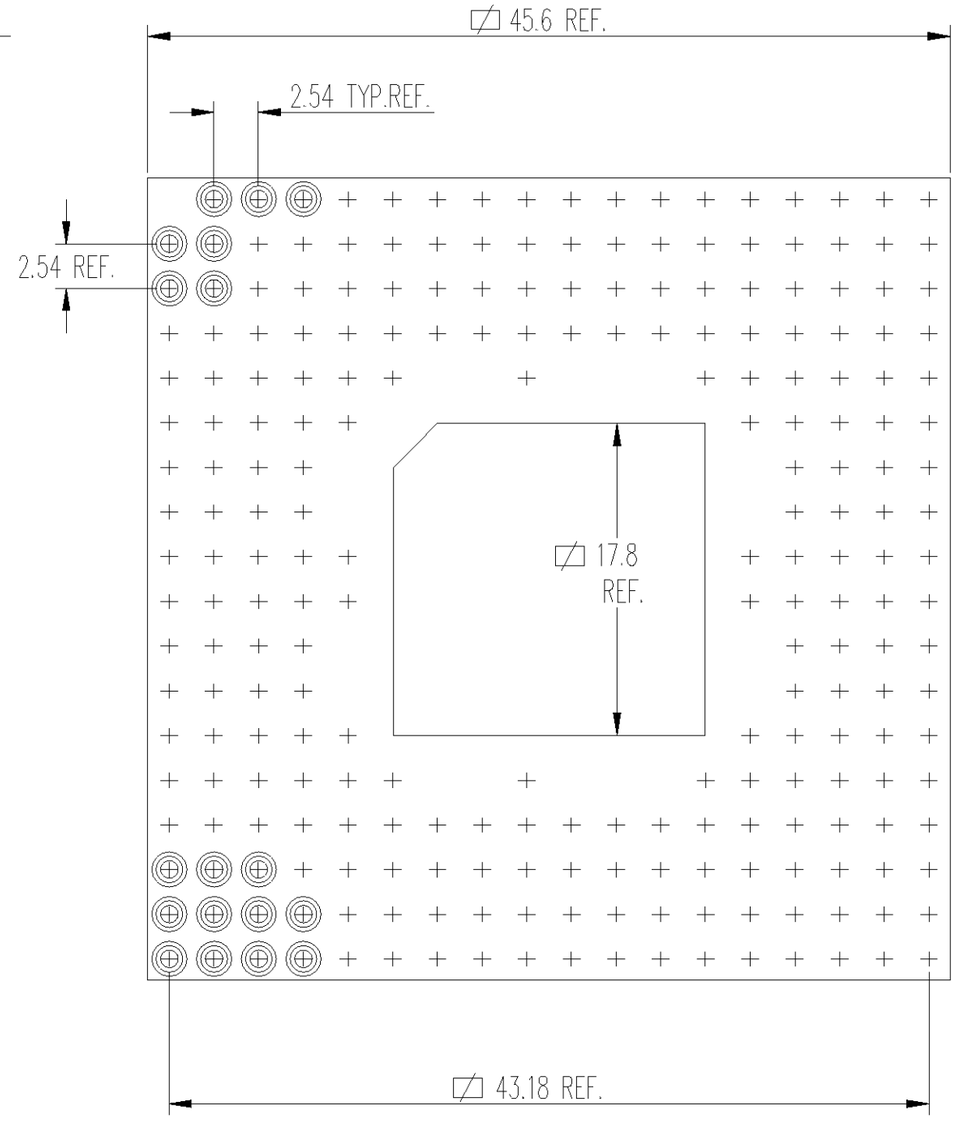

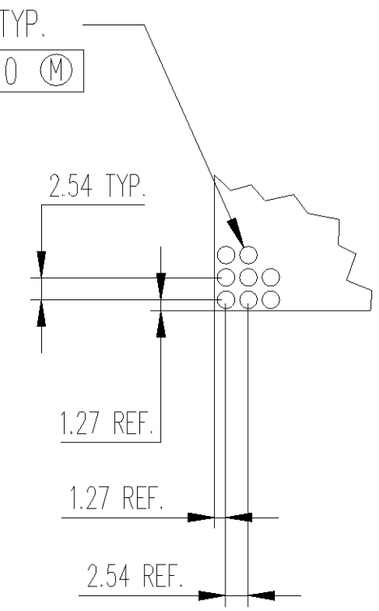

RECOMMENDED P.C.
BOARD PATTERN

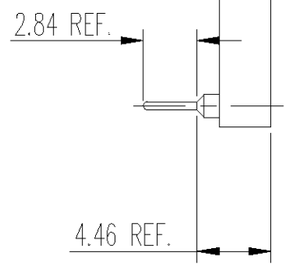

PRESS-FIT, DETAIL Z

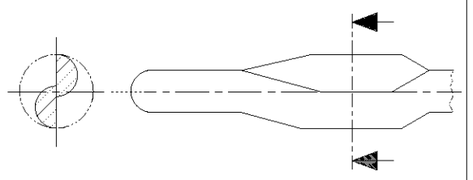

PREFIX : "4-" AND "5-"
RECOMMENDED PCB FINISHED
HOLE SIZE Ø 0.60 +/-0.05

NOTE :

1. MATERIAL
   - -INSULATOR : GLASSFILLED THERMOPLASTIC POLYESTER
   - -SOLDER TAIL SLEEVE : BRASS
   - -PRESS-FIT SLEEVE : PHOSPHOR BRONZE
   - -CLIP : STAMPED BERYLLIUM COPPER
2. SLEEVE PLATING:
   - -PREFIX "0-" AND "2-": 5µm Sn/Pb OVER 2-3µm Ni
   - -PREFIX "1-" AND "3-": 0.25µm Au OVER 2-3µm Ni
   - -PREFIX "4-" AND "5-": 3µm Sn/Pb OVER 2-3µm Ni
3. INNER CONTACT PLATING
   - -SUFFIX "-1" 0.25µm 18c. Au
   - -SUFFIX "-3" 0.75µm 18c. Au
   - -SUFFIX "-4" 0.75µm 24c. Au
   - -SUFFIX "-5" 5µm MIN. Sn/Pb **
   - -SUFFIX "-6" 0.1µm FLASH 24c. Au
   - -SUFFIX "-7" 0.60µm 18c. Au
   - - ** ONLY WITH PREFIX "0-", "2-", "4-" AND "5-"
4. INNER SPRING CONTACT ACCEPT Ø 0.40 TO 0.56
   OR RECTANGULAR PIN 0.25 x 0.45
5. INSERTION CARACTERISTICS:
   - -PREFIX "0-", "1-" AND "4-" : VERY LOW FORCE
   - -PREFIX "2-", "3-" AND "5-" : ULTRA LOW FORCE
6. MECHANICAL DATA WITH A Ø 0.43 TEST PIN :

	VLI	ULI
-MAX. INSERTION FORCE :	0.7N	0.2N
-MIN. EXTRACTION FORCE :	0.1N	0.05N

   - -MECHANICAL LIFE : 100 CYCLES MIN.

WAS 700-241-18-0-CC AND CCAP

DIMENSIONS	mm						
SURFACE TEXTURE	N7						
CONCENTRICITY	0.15		0	NEW CAD RAWING			
PRODUCT SPEC.		P	REV	ECN	DRWN	DATE	APVD

DRAWN P.-A. MEIER	22 JUL 98
CHECKED A. BOLIS	22 JUL 98
APPROVED	

CUSTOMER DRAWING
FOR REFERENCE ONLY

THIS INFORMATION IS CONFIDENTIAL AND IS DISCLOSED TO YOU ON CONDITION THAT NO FUTHER DISCLOSURE IS MADE BY YOU TO OTHER THAN AMP PERSONNEL WITHOUT WRITTEN AUTHORIZATION FROM DSM SWITZERLAND.

NAME
OPEN FRAME PGA
18 x 18, 241 SOCKETS

AMP
DSM DECOLLETAGE SA SAINT-MAURICE
CH 1890 SAINT-MAURICE (VS)

LOC	SCALE	SIZE	DRAWING NO	SHEET	REVISION
EK	2/1	A4	C- 210715	1 OF 1	O